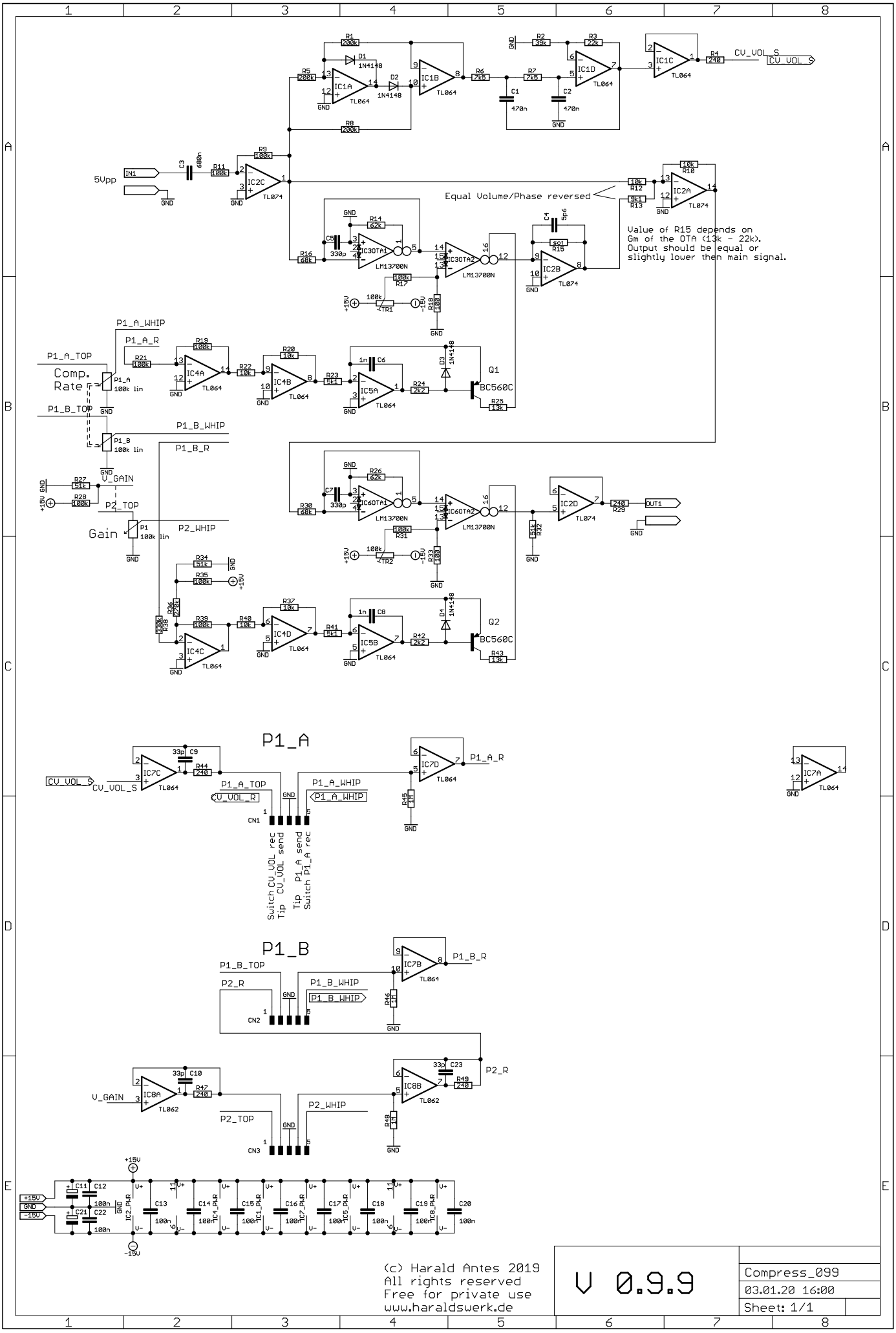

(c) Harald Antes 2019
All rights reserved
Free for private use
www.haraldswerk.de

V 0.9.9

Compress_099
03.01.20 16:00
Sheet: 1/1